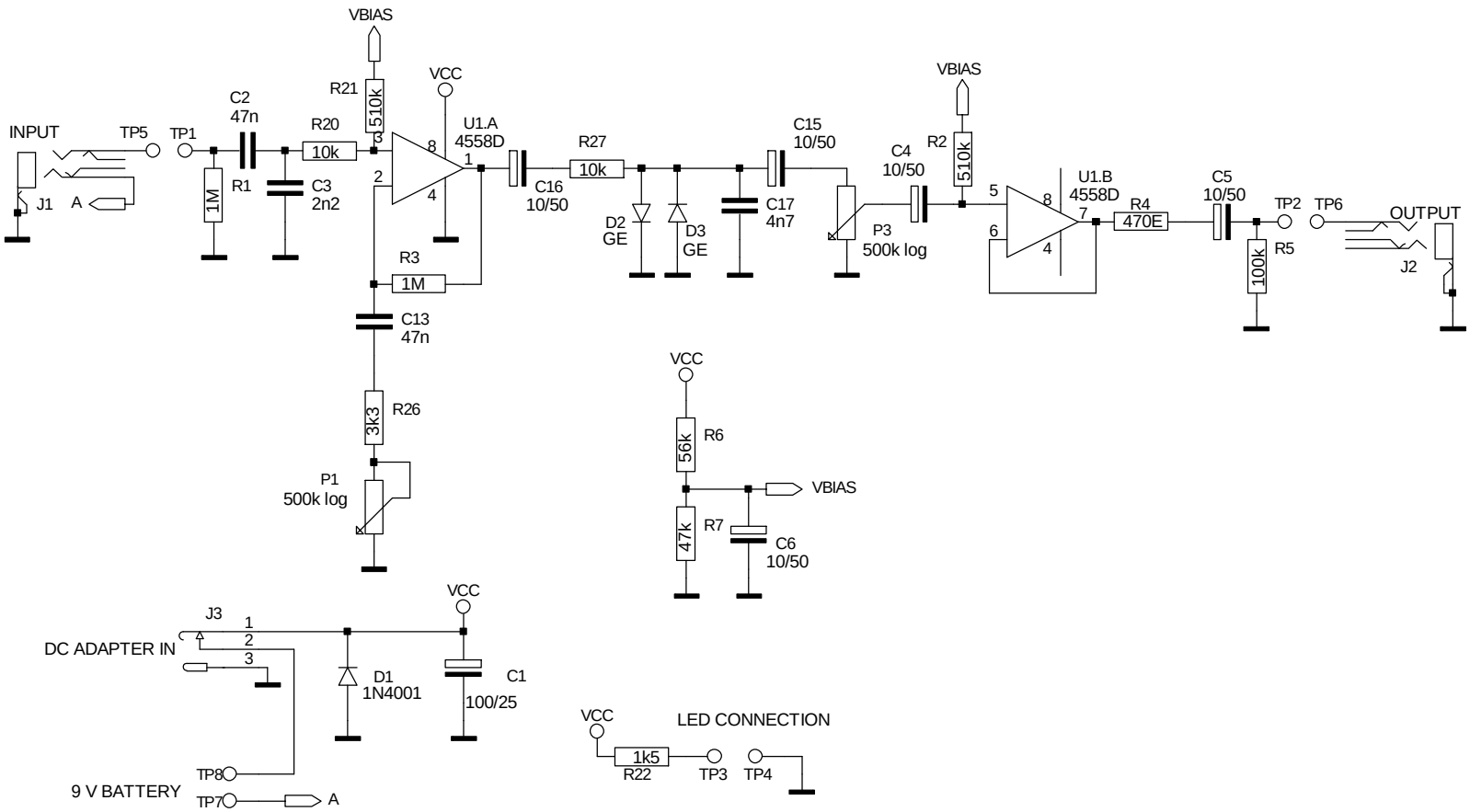

REV: P	DATE: 29 MAY 2005	ENG: DIRK_HENDRIK
PROJECT: CORON JET EXTRACTION		
COMPANY: ADDRESS: CITY AMSTERDAM COUNTRY: HOLLAND		
INITIAL 29 MAY 2005	PAGE: 1	OF: 1

PDF created with pdfFactory Pro trial version www.pdffactory.com