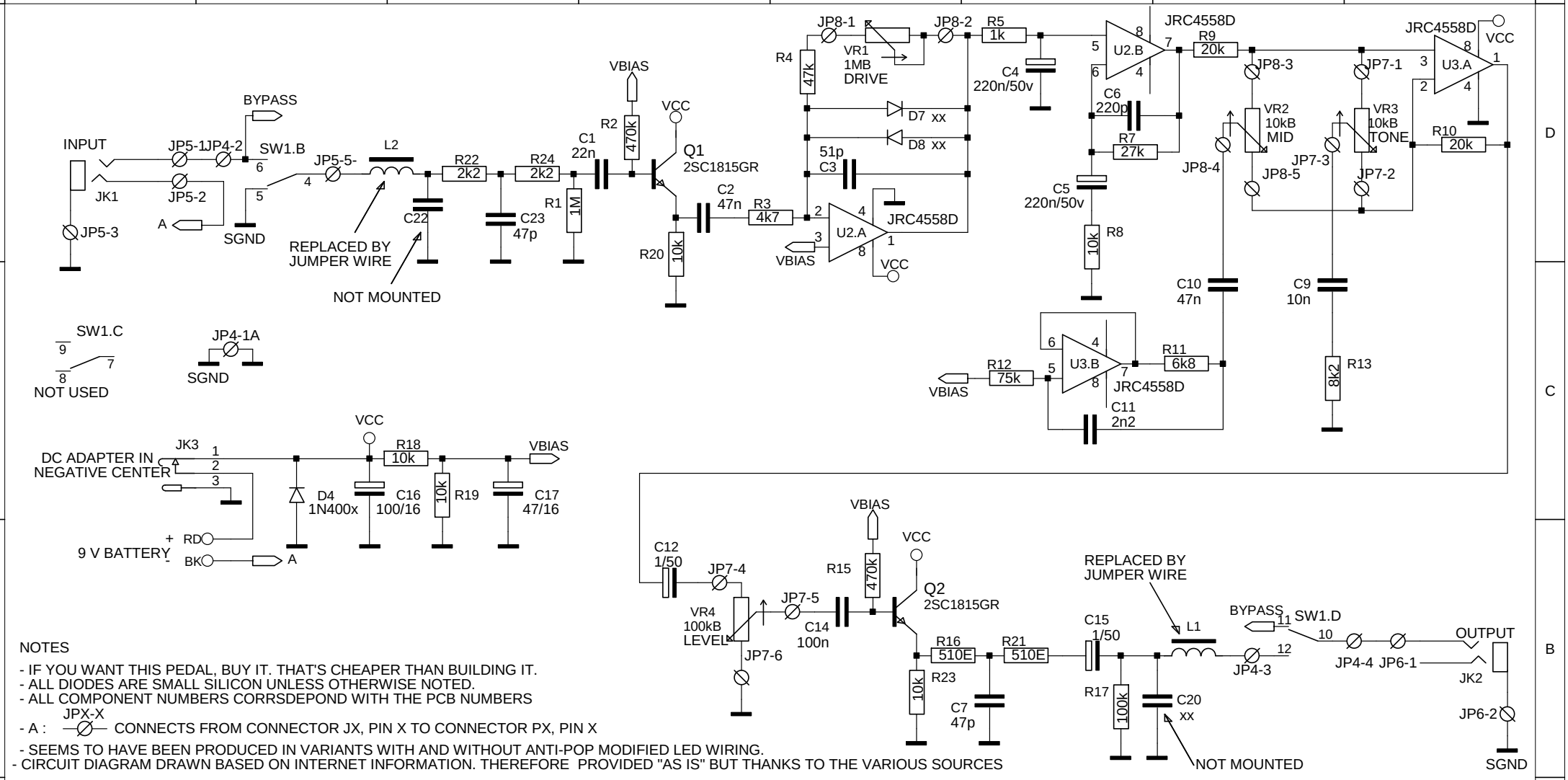

NOTES

- IF YOU WANT THIS PEDAL, BUY IT. THAT'S CHEAPER THAN BUILDING IT.
- ALL DIODES ARE SMALL SILICON UNLESS OTHERWISE NOTED.
- ALL COMPONENT NUMBERS CORRSDEPOND WITH THE PCB NUMBERS
- A : JPX-X CONNECTS FROM CONNECTOR JX, PIN X TO CONNECTOR PX, PIN X
- SEEMS TO HAVE BEEN PRODUCED IN VARIANTS WITH AND WITHOUT ANTI-POP MODIFIED LED WIRING.
- CIRCUIT DIAGRAM DRAWN BASED ON INTERNET INFORMATION. THEREFORE PROVIDED "AS IS" BUT THANKS TO THE VARIOUS SOURCES

Dirk_Hendrik

REV: P	DATE: 28 JULY 2014	DRAWN: DIRK_HENDRIK
PROJECT: IBANEZ JD9 JET DRIVER		
COMPANY: ADDRESS: CITY AMSTERDAM COUNTRY: HOLLAND		
INITIAL 24 JULY 2014	PAGE: 1	OF: 1

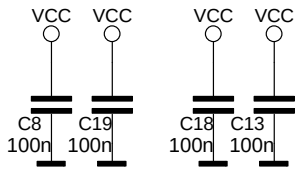
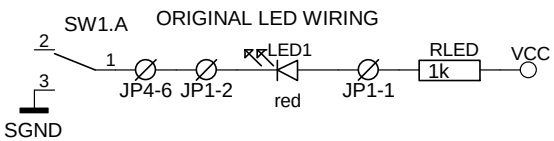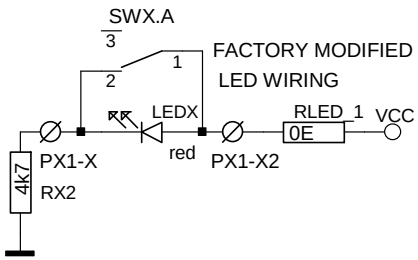
U3 DECOUPLING U2 DECOUPLING