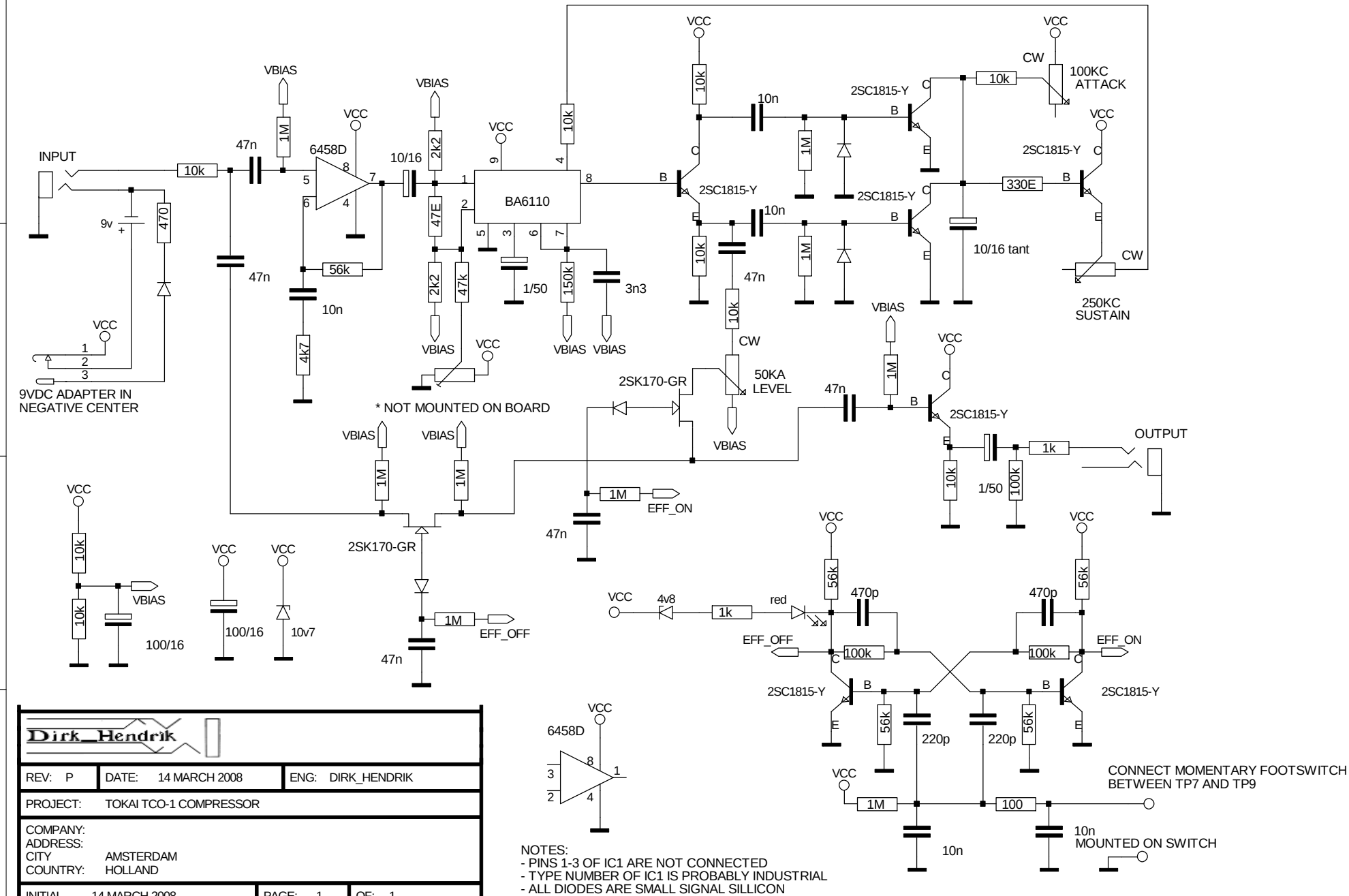

Dirk_Hendrik

REV: P	DATE: 14 MARCH 2008	ENG: DIRK_HENDRIK
PROJECT: TOKAI TCO-1 COMPRESSOR		
COMPANY: ADDRESS: CITY AMSTERDAM COUNTRY: HOLLAND		
INITIAL 14 MARCH 2008	PAGE: 1	OF: 1

NOTES:
- PINS 1-3 OF IC1 ARE NOT CONNECTED
- TYPE NUMBER OF IC1 IS PROBABLY INDUSTRIAL
- ALL DIODES ARE SMALL SIGNAL SILLICON